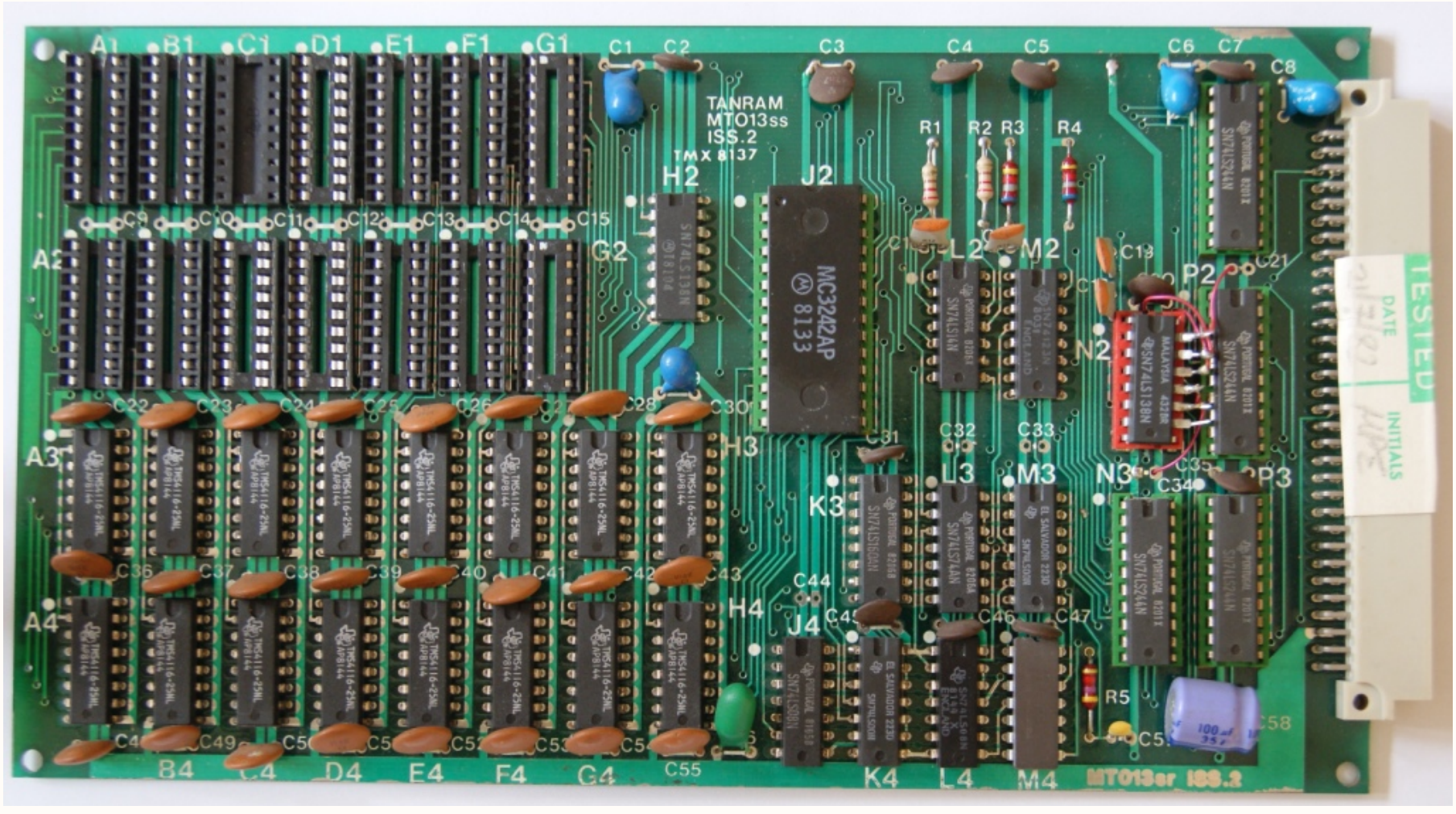

Title	MICROTAN 65 - TANRAM		
Size A4	Number MT013		Revision iss.2
Date: 13/07/2015		Sheet of	
File: M:\Development\..\MT65 TANRAM PI		Drawn by:	C. B. Shaw

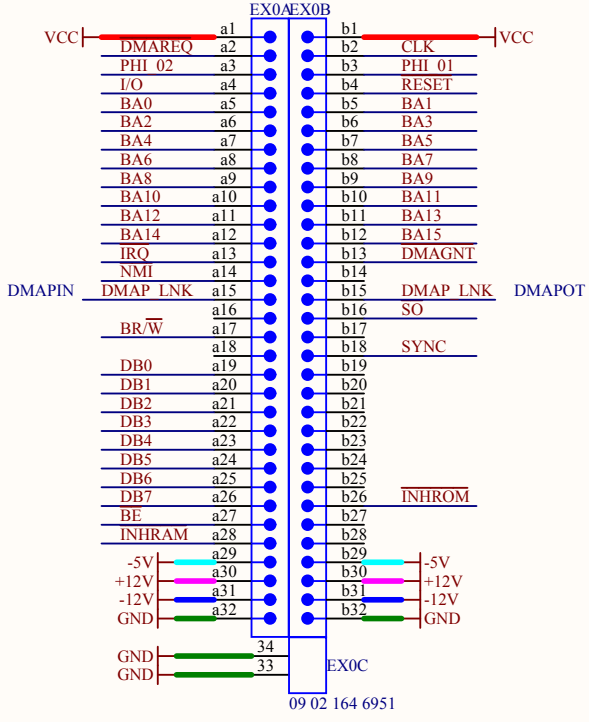

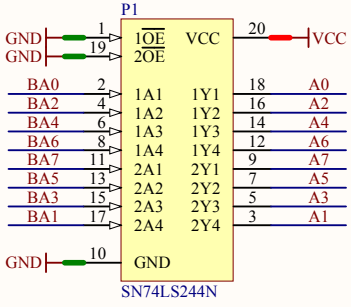

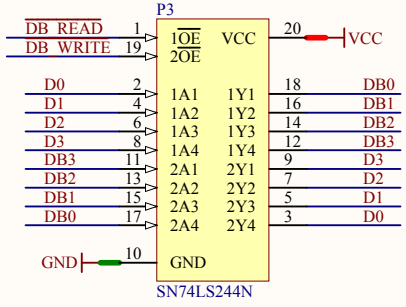

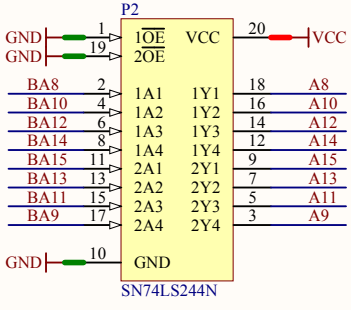

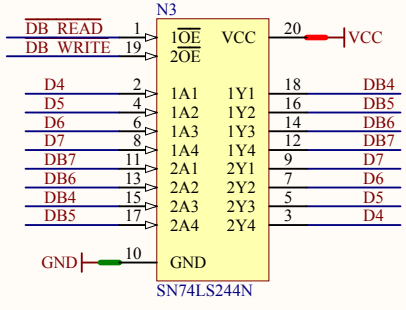

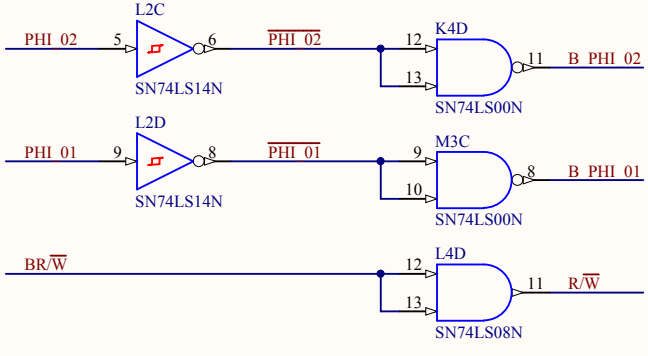

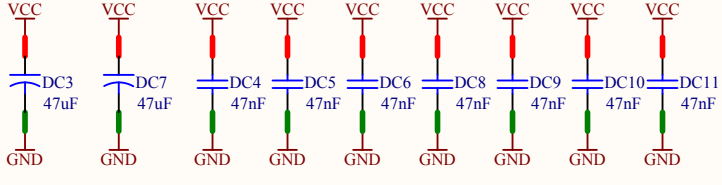

Title: **MICROTAN 65 - TANRAM**		
Size: A4	Number: **MT013**	Revision: **iss.2**
Date: 13/07/2015	Sheet of	
File: M:\Development\..\EXPCON_BUF.SchDoc	Drawn By: C. B. Shaw	

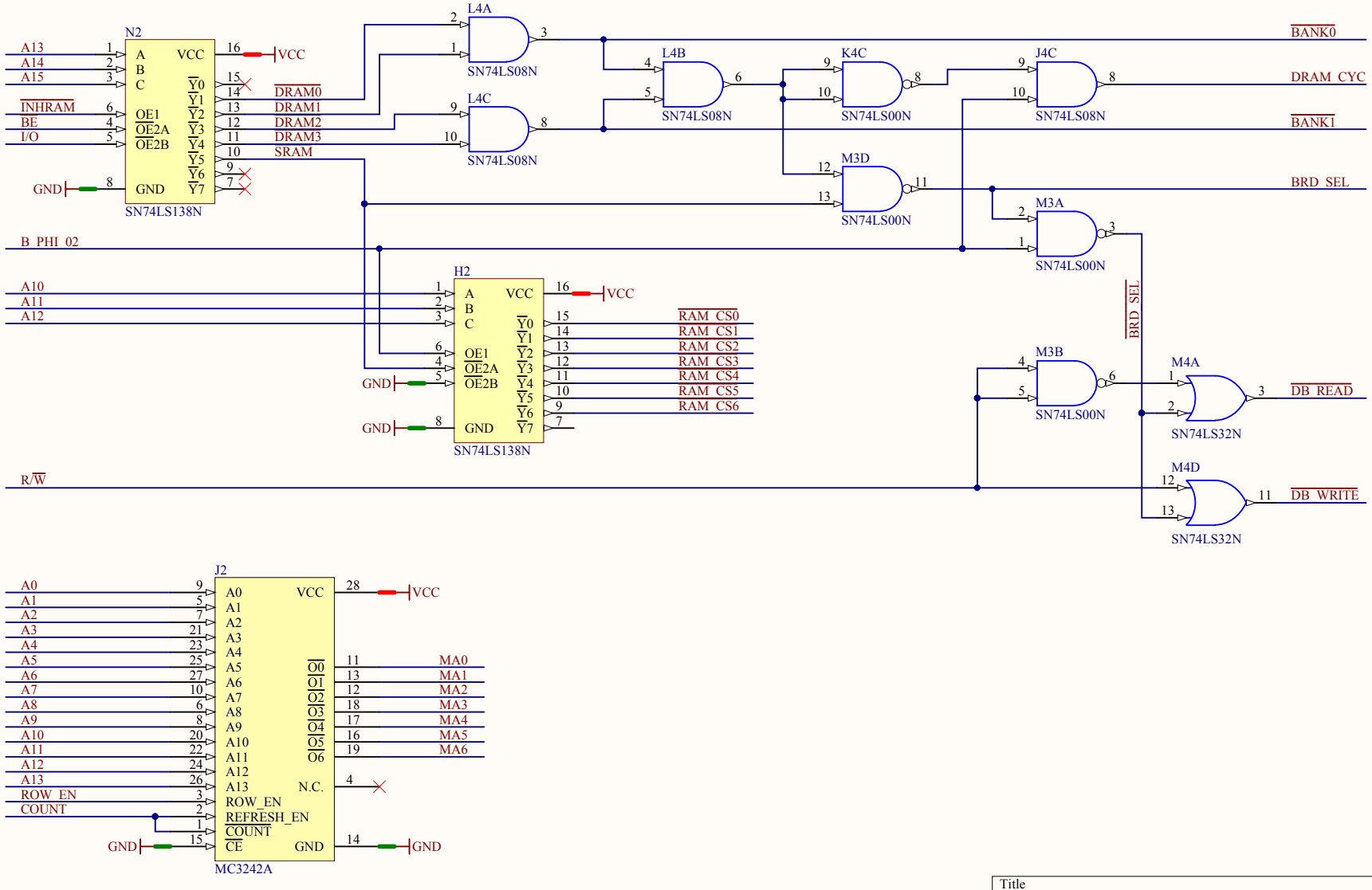

Title	**MICROTAN 65 - TANRAM**	
Size: A4	Number: **MT013**	Revision: **iss.2**
Date: 13/07/2015		Sheet of
File: M:\Development\..\DECODE.SchDoc		Drawn By: C. B. Shaw

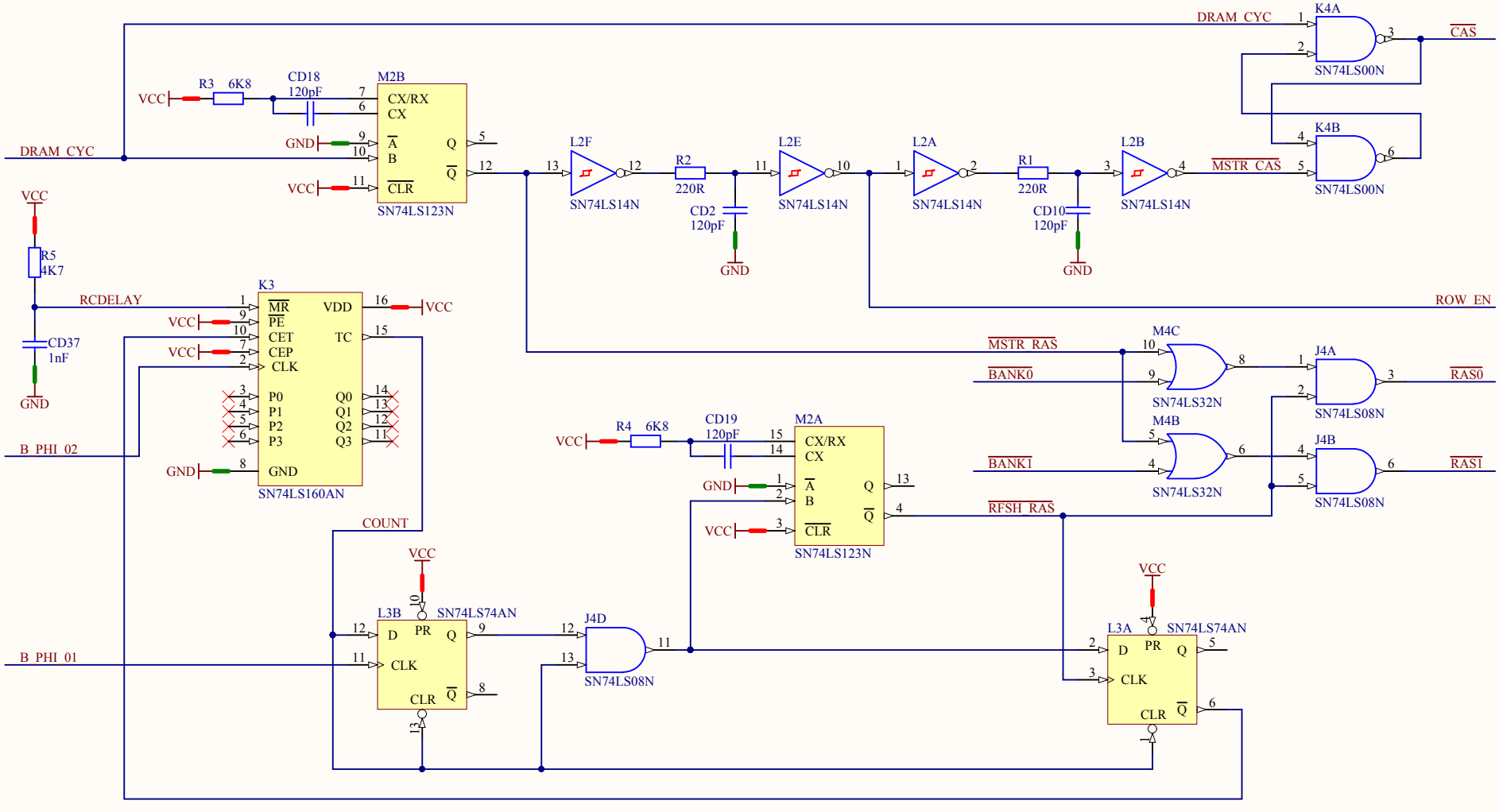

Title	MICROTAN 65 - TANRAM	
Size: A4	Number: MT013	Revision: iss.2
Date: 13/07/2015	Sheet of	
File: M:\Development\..\DRAM_TIMING.Sch	Drawn By: C. B. Shaw	

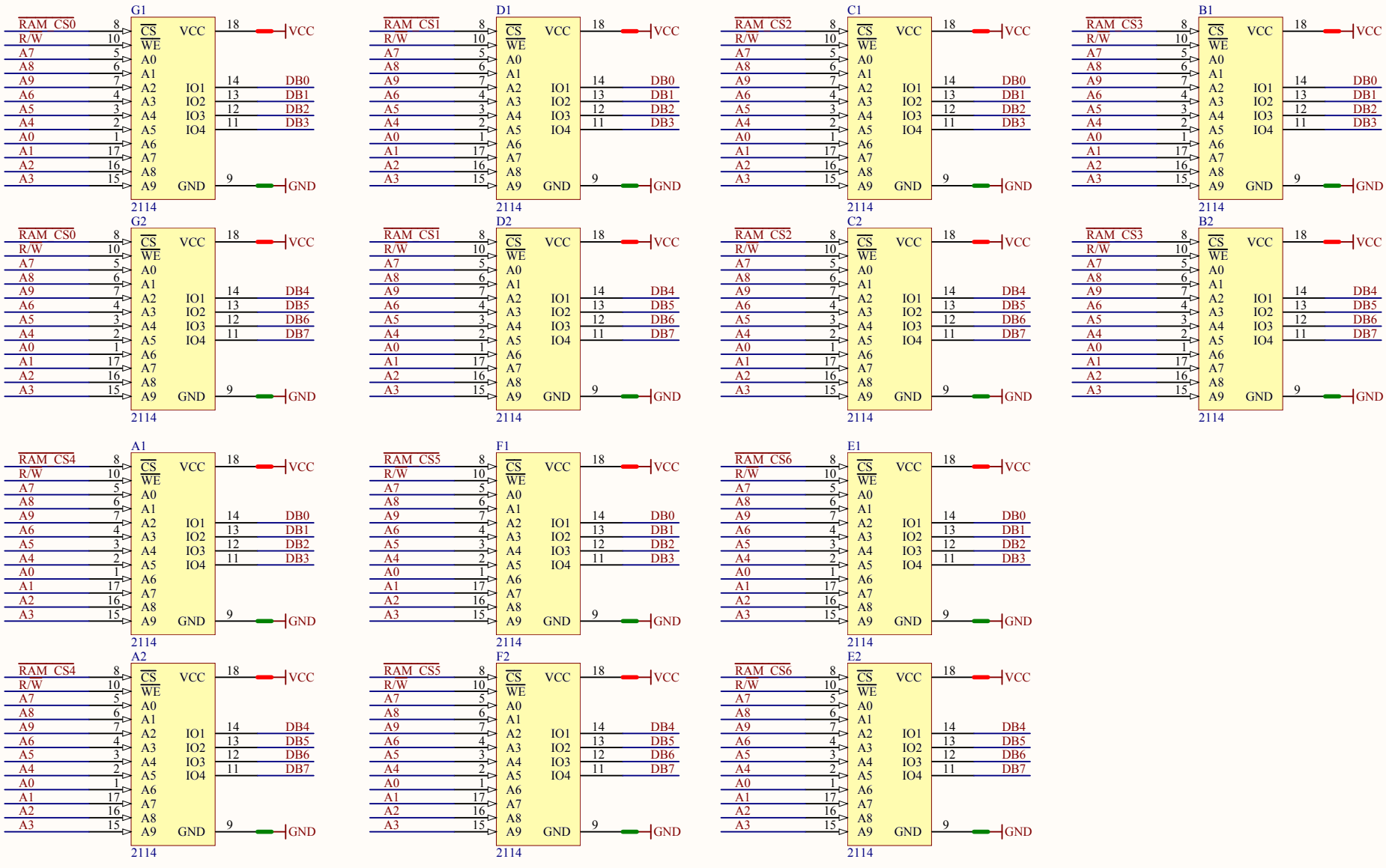

Title	MICROTAN 65 - TANRAM	
Size: A4	Number: MT013	Revision: iss.2
Date: 13/07/2015		Sheet of
File: M:\Development\..\SRAM.SchDoc		Drawn By: C. B. Shaw

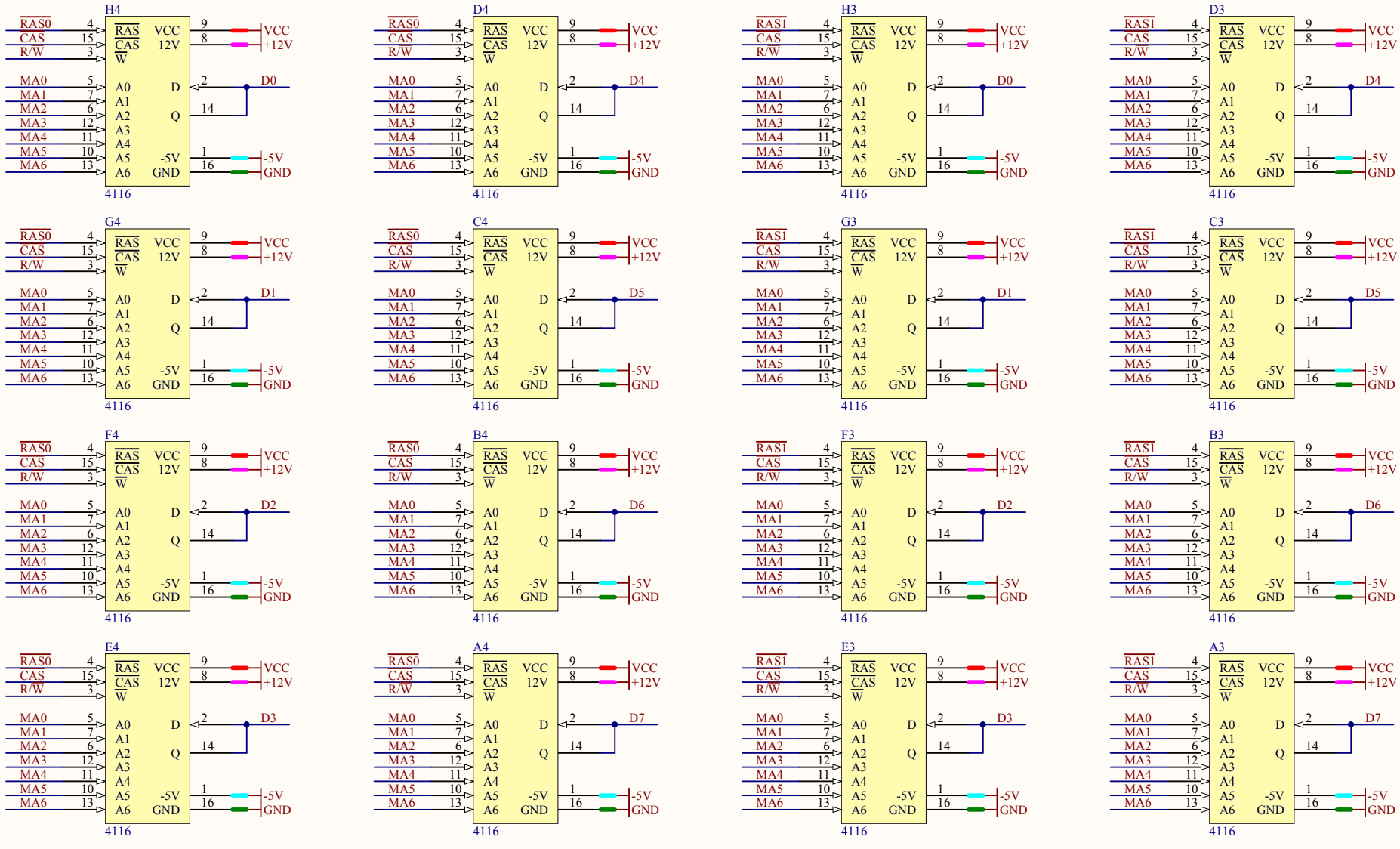

Title	**MICROTAN 65 - TANRAM**	
Size: A4	Number: **MT013**	Revision: **iss.2**
Date: 13/07/2015		Sheet of
File: M:\Development\..\DRAM.SchDoc		Drawn By: C. B. Shaw